INDUSTRIAL PORTABLE SPOT COOLER 6800BTU (2KW)

MODEL NO: **SAC7001**

Thank you for purchasing a Sealey product. Manufactured to a high standard, this product will, if used according to these instructions, and properly maintained, give you years of trouble free performance.

IMPORTANT: PLEASE READ THESE INSTRUCTIONS CAREFULLY. NOTE THE SAFE OPERATIONAL REQUIREMENTS, WARNINGS & CAUTIONS. USE THE PRODUCT CORRECTLY AND WITH CARE FOR THE PURPOSE FOR WHICH IT IS INTENDED. FAILURE TO DO SO MAY CAUSE DAMAGE AND/OR PERSONAL INJURY AND WILL INVALIDATE THE WARRANTY. KEEP THESE INSTRUCTIONS SAFE FOR FUTURE USE.



Refer to instruction manual



DO NOT cover



Indoor use only



Caution! Risk of fire

This unit uses a flammable refrigerant.

If refrigerant leaks and comes in contact with fire or heating part, it will create harmful gas and there is risk of fire.

Read the USER MANUAL carefully before operation.

1. SAFETY

1.1. ELECTRICAL SAFETY

❑ **WARNING!** It is the user's responsibility to check the following:

✓ Check all electrical equipment and appliances to ensure that they are safe before using.

✓ Inspect power supply leads, plugs and all electrical connections for wear and damage.

✓ Ensure that the insulation on all cables and on the appliance is safe before connecting it to the power supply.

× **DO NOT** use worn or damaged cables, plugs or connectors.

✓ Ensure that any faulty item is repaired or replaced immediately by a Sealey qualified technician.

✓ If the cable or plug is damaged during use, switch off the electricity supply and remove from use.

✓ Sealey recommend that an RCD (Residual Current Device) is used with all electrical products.

Important: Ensure that the voltage rating on the appliance suits the mains power supply.

× **DO NOT** pull or carry the appliance by the power cable.

× **DO NOT** pull the plug from the socket by the cable.

✓ If the supply cord is damaged, it must be replaced by the manufacturer, its service agent or similarly qualified persons in order to avoid a hazard.

CAUTION: In order to avoid a hazard due to inadvertent resetting of the thermal cut-out, this appliance must not be supplied through an external switching device, such as a timer, or connected to a circuit that is regularly switched on and off by the utility.

1.2. GENERAL SAFETY

✓ Check that the unit is in sound condition and good working order. Take immediate action to repair or replace damaged parts.

NOTE: This appliance is for professional repair only.

❑ **WARNING!** In the event of an accident or breakdown turn off the appliance immediately and, if safe to do so, remove the plug from the socket. Store the appliance in a dry, secure area until it can assessed by a qualified technician.

✓ Use recommended parts only. Unauthorised parts may be dangerous and will invalidate the warranty.

NOTE: Appliance is filled with R290.

✓ Appliance shall be installed, operated and stored in a room with a floor area larger than 10m².

× **DO NOT** perforate any of the components in the refrigerant circuit. Refrigerant gas may be odourless.

× **DO NOT** attempt any repairs.

× **DO NOT** stand or place any object closer than 30cm from the unit.

× **DO NOT** place the appliance hot exhaust outlet closer than 90cm to a wall or other obstacle.

× **DO NOT** obstruct the air intakes or outlets of the unit.

× **DO NOT** place any object into the outlets - the unit has a fan running at high speed, contact with this will cause injury.

× **DO NOT** operate the unit when you are tired or under the influence of alcohol, drugs or intoxicating medication.

× **DO NOT** switch the unit off by disconnecting it from the mains. ALWAYS switch to the "OFF" position first.

× **DO NOT** remove the float lever from the water collection tank.

× **DO NOT** connect or disconnect the plug from the mains with wet hands.

✓ Always discard the water from the collection tank, **DO NOT** use it for any other purpose.

✓ Place the unit on a level and stable surface.

✓ To prevent water from freezing, **DO NOT** use the unit at ambient temperatures below 0°C.

× **DO NOT** use the unit outside.

× **DO NOT** expose to rain, moisture or any other liquid.

✓ Ensure that heating appliances are not exposed to the flow of air from the unit.

✓ Before attempting to move the unit, empty the contents of the water tank. Use side carrying handles when moving unit.

✓ Switch off and disconnect unit from the mains before attempting any cleaning or other maintenance work.

✓ Ensure that the unit is turned off correctly when not in use, and stored in a safe, dry area, out of reach of children.

✓ Children from age 8 years and above, persons with reduced physical, sensory, or mental capabilities those with lack of experience and knowledge can use the appliance, if they have been given supervision or instruction concerning use of the appliance in a safe way to understand the hazards involved.

© Jack Sealey Limited

× **DO NOT** allow children to play with the appliance.
× **DO NOT** allow children to perform cleaning or user maintenance on the appliance without supervision.
✓ The appliance shall be disconnected from its power source during service and when replacing parts.
× **DO NOT** immerse or expose the unit to rain, moisture or any other liquid.
× **DO NOT** leave the unit running unattended. Do not tilt or turn over the unit.
× **DO NOT** unplug while the unit is operating.
✓ The unit is designed only for use with R-290 (propane) gas as the designated refrigerant.
✓ The refrigerant loop is sealed. Only a qualified technician should attempt to service.
× Do not discharge the refrigerant into the atmosphere.
✓ R-290 (propane) is flammable and heavier than air. It collects first in low areas but can be circulated by the fans.
× If propane gas is present or even suspected, **DO NOT** allow untrained personnel to attempt to find the cause.
✓ The propane gas used in the unit has no odour. The lack of smell does not indicate a lack of escaped gas.
✓ If a leak is detected, immediately evacuate all persons from the area, ventilate the room and contact the local fire department to advise them that a propane leak has occurred.
× **DO NOT** let any persons back into the room until the qualified service technician has arrived and that technician advises that it is safe to return to the room.
× No open flames, cigarettes or other possible sources of ignition should be used inside or in the vicinity of the unit.
✓ Component parts are designed for propane and non-incentive and non-sparking. Component parts shall only be replaced with identical repair parts.
❑ **WARNING! FAILURE TO ABIDE BY THIS WARNING COULD RESULT IN AN EXPLOSION, DEATH, INJURY AND PROPERTY DAMAGE.**

1.3. FLAMMABLE REFRIGERANTS USED - R290 GAS SAFETY

1.3.1. CHECKS TO THE AREA

Prior to beginning work on systems containing flammable refrigerants, safety checks are necessary to ensure that the risk of ignition is minimised. For repair to the refrigerating system, the following precaution shall be completed prior to conducting work on the system.

1.3.2. WORK PROCEDURE

Work shall be undertaken under a controlled procedure so as to minimise the risk of a flammable gas or vapour being present while the work is being performed.

1.3.3. GENERAL WORK AREA

All maintenance staff and others working in the local area shall be instructed on the nature of work being carried out. Work in confined spaces shall be avoided.

1.3.4. CHECKING FOR PRESENCE OF REFRIGERANT

The area shall be checked with an appropriate refrigerant detector prior to and during work, to ensure the technician is aware of potentially toxic or flammable atmospheres. Ensure that the leak detection equipment being used is suitable for use with all applicable refrigerants, i.e. non-sparking, adequately sealed or intrinsically safe.

1.3.5. PRESENCE OF FIRE EXTINGUISHER

If any hot work is to be conducted on the refrigerating equipment or any associated parts, appropriate fire extinguishing equipment shall be available to hand. Have a dry powder or CO2 fire extinguisher adjacent to the charging area.

1.3.6. NO IGNITION SOURCES

No person carrying out work in relation to a refrigerating system which involves exposing any pipe work shall use any sources of ignition in such a manner that it may lead to the risk of fire or explosion. All possible ignition sources, including cigarette smoking, should be kept sufficiently far away from the site of installation, repairing, removing and disposal, during which refrigerant can possibly be released to the surrounding space. Prior to work taking place, the area around the equipment is to be surveyed to make sure that there are no flammable hazards or ignition risks. “No Smoking” signs shall be displayed.

1.3.7. VENTILATED AREA

Ensure that the area is in the open or that it is adequately ventilated before breaking into the system or conducting any hot work. A degree of ventilation shall continue during the period that the work is carried out. The ventilation should safely disperse any released refrigerant and preferably expel it externally into the atmosphere.

1.3.8. CHECKS TO THE REFRIGERATING EQUIPMENT

Where electrical components are being changed, they shall be fit for the purpose and to the correct specification. At all times, the manufacturer’s maintenance and service guidelines shall be followed. If in doubt, consult the manufacturer’s technical department for assistance. The following checks shall be applied to installations using flammable refrigerants:

- The actual refrigerant charge is in accordance with the room size within which the refrigerant containing parts are installed.
- The ventilation machinery and outlets are operating adequately and are not obstructed.
- If an indirect refrigerating circuit is being used, the secondary circuit shall be checked for the presence of refrigerant.
- Marking to the equipment continues to be visible and legible. Markings and signs that are illegible shall be corrected.
- Refrigerating pipe or components are installed in a position where they are unlikely to be exposed to any substance which may corrode refrigerant containing components, unless the components are constructed of materials which are inherently resistant to being corroded or are suitably protected against being so corroded.

1.3.9. CHECKS TO ELECTRICAL DEVICES

Repair and maintenance to electrical components shall include initial safety checks and component inspection procedures.

If a fault exists that could compromise safety, then no electrical supply shall be connected to the circuit until it is satisfactorily dealt with. If the fault cannot be corrected immediately but it is necessary to continue operation, an adequate temporary solution shall be used. This shall be reported to the owner of the equipment so all parties are advised.

Initial safety checks shall include:

- That capacitors are discharged: this shall be done in a safe manner to avoid possibility of sparking.
- That no live electrical components and wiring are exposed while charging, recovering or purging the system.
- That there is continuity of earth bonding.

1.3.10. CABLING

Check that cabling will not be subject to wear, corrosion, excessive pressure, vibration, sharp edges or any other adverse environmental effects. The check shall also take into account the effects of aging or continual vibration from sources such as compressors or fans.

1.3.11. DETECTION OF FLAMMABLE REFRIGERANTS

Under no circumstances shall potential sources of ignition be used in the searching for or detection of refrigerant leaks. A halide torch (or any other detector using a naked flame) shall not be used.

1.3.12. REMOVAL AND EVACUATION

When breaking into the refrigerant circuit to make repairs – or for any other purpose – conventional procedures shall be used. However, for flammable refrigerants it is important that best practice is followed since flammability is a consideration. The following procedure shall be adhered to:

- Remove refrigerant;
- Purge the circuit with inert gas;
- Evacuate;
- Purge with inert gas;
- Open the circuit by cutting or brazing.

The refrigerant charge shall be recovered into the correct recovery cylinders. For appliances containing flammable refrigerants the system shall be purged with oxygen-free nitrogen to render the appliance safe for flammable refrigerants. This process may need to be repeated several times. Compressed air or oxygen shall not be used for purging refrigerant systems. For appliances containing flammable refrigerant, purging shall be achieved by breaking the vacuum in the system with oxygen-free nitrogen and continuing to fill until the working pressure is achieved, then venting to atmosphere, and finally pulling down to a vacuum. This process shall be repeated until no refrigerant is within the system. When the final oxygen-free nitrogen charge is used, the system shall be vented down to atmospheric pressure to enable work to take place. This operation is absolutely vital if brazing operations on the pipe-work are to take place.

Ensure that the outlet for the vacuum pump is not close to any potential ignition sources and that ventilation is available.

1.3.13. CHARGING PROCEDURES

In addition to conventional charging procedures, the following requirements shall be followed.

- Ensure that contamination of different refrigerants does not occur when using charging equipment. Hoses or lines shall be as short as possible to minimise the amount of refrigerant contained in them.
- Cylinders shall be kept in an appropriate position according to the instructions.
- Ensure that the refrigerating system is earthed prior to charging the system with refrigerant.
- Label the system when charging is complete (if not already).
- Extreme care shall be taken not to overfill the refrigerating system.

Prior to recharging the system, it shall be pressure-tested with the appropriate purging gas. The system shall be leak-tested on completion of charging but prior to commissioning. A follow up leak test shall be carried out prior to leaving the site.

2. INTRODUCTION

Industrial portable spot sooler, delivering 6,800Btu (2kW) air conditioning and ventilation. Single wind speed enables efficient cooling in industrial, warehouse, office and garage environments. Self evaporating system for improved efficiency coupled with R290 refrigerant reducing environmental impact. Water full indicator with auto shut-off and audible alarm. 360° swivel duct for targeted airflow suitable for work areas that are 5–10m². Air conditioning capability operating between 20-43°C. Washable air filter supporting consistent performance. Castor-mounted design ensuring smooth manoeuvrability in a busy areas.

3. SPECIFICATION

MODEL NO:	SAC7001
Cooling Capacity	6800Btu
Room Coverage	5 - 10 m^2
Energy Rating	A (EER: 2.9)
IP Rating	IPX0
Refrigerant	R290
Mass of Refrigerant	200g
Maximum Airflow	230m^3/hr
Maximum Water Extraction Rate	0.65kg/hr
Noise Level	62dB(A)
Power Supply Cable Length	1.3m
Rated Power	700W
Rated Current	3.2A
Rated Capacity	2000W
Discharge Side Pressure	2.5MPa
Suction Side Pressure	1.0MPa
Supply	230V ~ 50Hz
Dimensions	465 x 287 x 586 mm
Net Weight	27.3kg
Operating Temperature	20°C - 43°C



© Jack Sealey Limited

4. FEATURES

1	Cold Air Outlet
2	On/Off Switch
3	Water Full Indicator
4	Air Inlet/Filter
5	Handles
6	Hot Exhaust Outlet
7	Water Tank

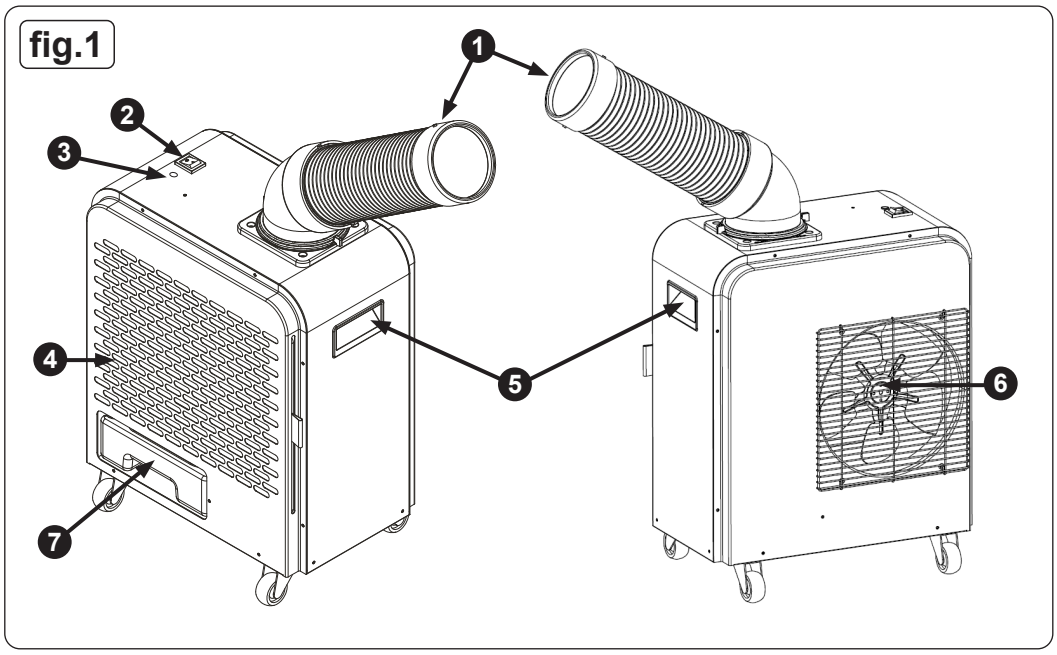

5. ASSEMBLY

5.1. INSTALL THE COLD AIR OUTLET (fig.2)

5.2. Fit the elbow onto the mount located on the top of the unit.

5.3. Align the lugs on the elbow (fig.2.2) with the corresponding notches on the elbow mount (fig.2.3) and rotate anti-clockwise until it clicks into place.

5.4. Align the lugs on the end of the cold air outlet pipe (fig.2.1) with the corresponding notches on the elbow (fig.2.2). Rotate anti-clockwise until it locks into place.

✓ The cold air outlet can rotate 360° degrees and the angle can be adjusted by approximately 150° degrees (fig.3).
NOTE: Adjust the angle by holding the elbow and the pipe at the same time.

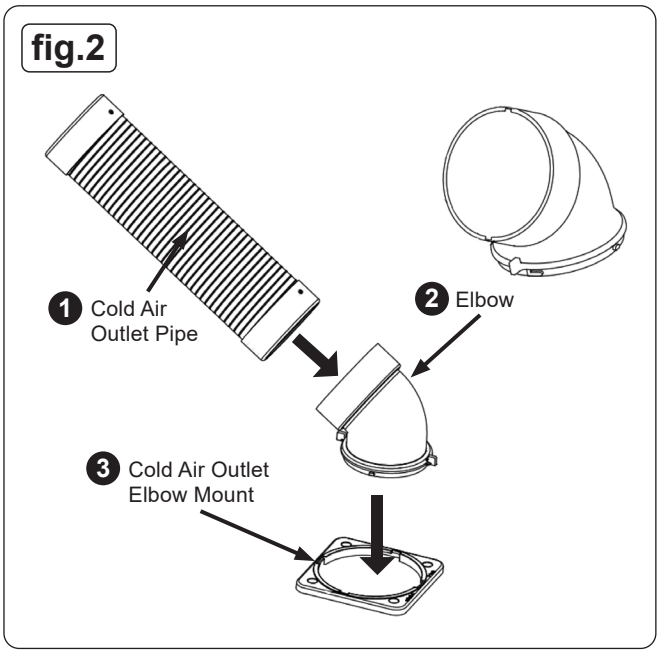

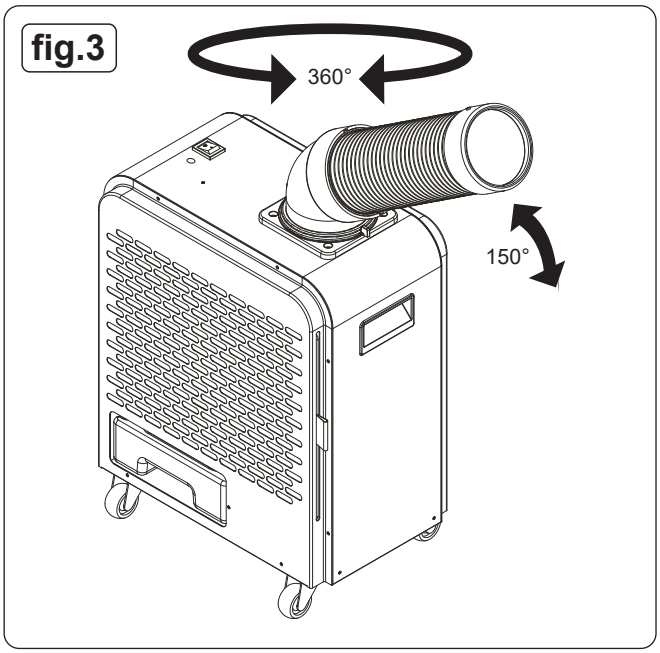

© Jack Sealey Limited

6. INSTALLATION

6.1. CORRECT PLACEMENT (fig.4)

6.2. The air conditioner must only be used in rooms with a floor area larger than 7m^2.

6.3. The unit must be positioned so that the rear hot exhaust vent is a minimum of 80cm away from any wall or other obstacle.

6.4. The unit must be positioned so that the front, sides and the cold air outlet are a minimum of 30cm away from any wall and other obstacle.

6.5. The unit must be used only on a firm, level surface.

× **DO NOT** operate the unit on uneven, sloped surfaces or near entrances or exits in order to avoid a safety hazard.

× **DO NOT** expose the unit to rain or wet environments. For indoor use only.

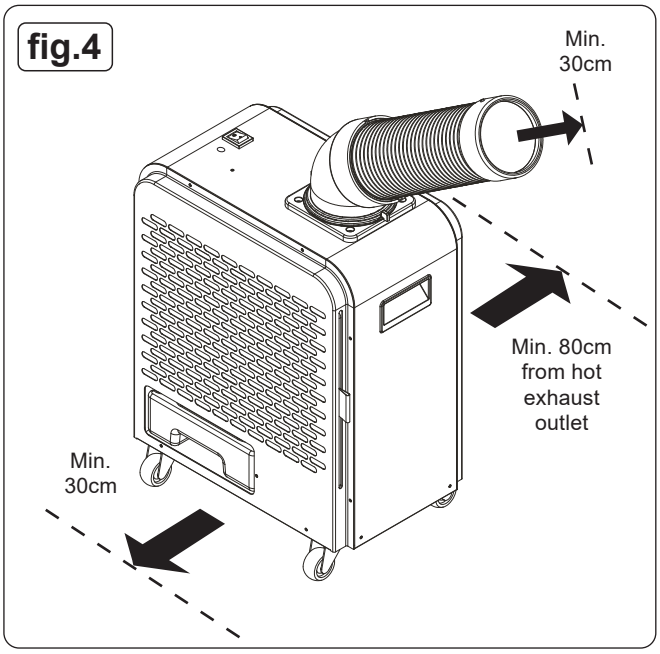

7. OPERATION

7.1. COOLING

7.1.1. Press the On/Offbutton (fig.1.2) to the 'I' position.

7.1.2. The compressor will start the cooling operation and start the fan.

7.1.3. Press the On/Off button to the 'O' position to switch the unit off.

7.2. COMPRESSOR OVERHEAT AND OVERLOAD PROTECTION

7.2.1. If high or low voltage is detected or if the ambient temperature rises above the safe operating limit of 43°C the unit will enter protection mode and turn the compressor off.

NOTE: When in protection mode the appliance will operate in fan mode only and will not use the compressor to refrigerate the air output.

NOTE: The unit has a 3-minute delay protection function for the compressor. When the unit is turned back on the compressor will not start for 3 minutes.

❑ **WARNING!** If protection mode is frequently activated the cause must be investigated and eliminated before continuing to use the appliance. If in doubt have the unit checked by Sealey service centre.

8. MAINTENANCE

8.1. WATER DRAINAGE

8.1.1. When the water tank (fig.5.3) reaches capacity, the water full indicator light (fig.5.1) will illuminate and the appliance will stop operating.

8.1.2. The condensed water collected by the unit must be drained in order to resume operation.

8.1.3. Switch off the unit.

8.1.4. Pull out the water tank (fig.5.3) from the side of the unit and empty the water.

8.1.5. Refit the water tank.

× **DO NOT** move the unit when the water tank is full. Drain all water beforehand.

8.2. AIR FILTER

8.2.1. The air inlet filter must be cleaned regularly, how often will depend on the amount of use (see fig.5.2).

❑ **WARNING!** If the filter becomes too dirty and clogged this will restrict the air intake supply and cause frost to build-up on the heat exchanger leading to a breakdown of the unit and potential hazard.

8.2.2. Clean the filter by using a vacuum cleaner to remove the majority of the dust and debris build-up.

8.2.3. Use clean water to carefully remove any remaining dust or debris.

× **DO NOT** operate the unit until the air filter has fully dried out.

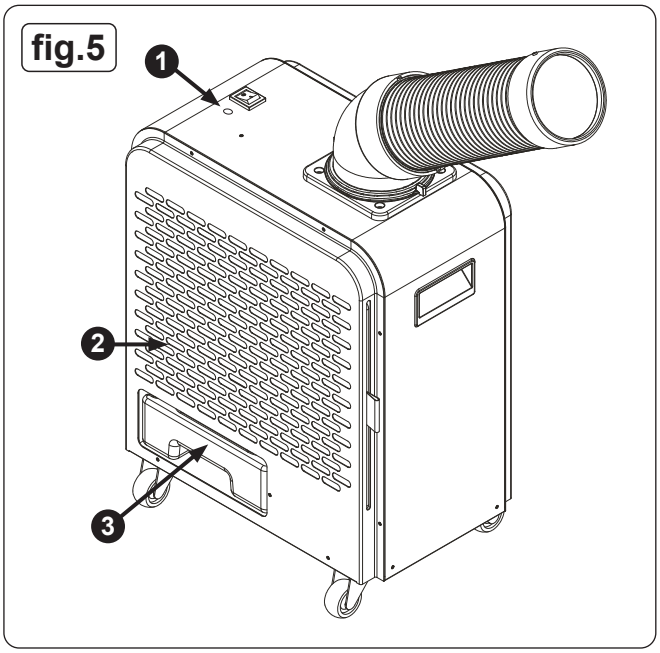

8.3. CLEANING

8.3.1. Clean the exterior of the unit with a dry brush or cloth.

8.3.2. If further cleaning is necessary, only use a mild detergent with a damp cloth and dry thoroughly with a soft cloth.

× **DO NOT** use caustic agents to clean plastic parts.

© Jack Sealey Limited

9. TRANSPORT AND STORAGE

- ✓ All water must be removed from the unit before storage.
- × **DO NOT** store or transport the unit on its side or upside down.
- ✓ Unit must be secured to inhibit any movement during transit.
- ✓ Store unit in a dry, secure area.

10. TROUBLESHOOTING

Fault	Cause	Solution
The unit is not working	Appliance not plugged in or plug not fully inserted into socket	Check plug is firmly inserted into socket and switched on
	Blown fuse	Replace fuse - Contact Sealey service centre
	Water full indicator light is on	Turn off, unplug appliance and drain all water (see section 8.1)
	Check the room temperature.	The range of operating temperature is 20°C - 43°C
The unit works with reduced capacity	Check if the air duct is blocked	Clear the obstacle
	Check the air filter	Clean the air filter (see Section 8.2)
	Ambient operating temperature too high	Turn off, disconnect from power supply and wait for temperature to reduce
	Protection mode triggered: Compressor overheated or overloaded	Wait until unit has cooled down and restart. If problem persists contact Sealey service centre
Water leak	Unit was moved before draining water	Turn off, unplug appliance and drain all water (see section 8.1)
	Water leaking from water tank	Refit water tank correctly
	Water pump motor malfunction	Repair or replace - Contact Sealey service centre
Excessive noise	Check the unit is securely positioned	Place the unit on horizontal and firm ground.
	Check for any loose, vibrating parts.	Secure and tighten the parts.
	Noise sounds like water flowing.	Noise comes from flowing refrigerant. This is normal.

11. END OF LIFE

11.1. At the end of its service life, this spot cooler must be disposed of in an environmentally responsible manner. Any liquids or gases such as the refrigerant and other hazardous materials should be drained and handled by an approved waste management facility. Components such as metal parts should be recycled wherever possible. **DO NOT** discard the appliance or fluids with general household or construction waste. Please follow all local environmental regulations to ensure safe and sustainable disposal.



WEEE REGULATIONS

Dispose of this product at the end of its working life in compliance with the EU Directive on Waste Electrical and Electronic Equipment (WEEE). When the product is no longer required, it must be disposed of in an environmentally protective way. Contact your local solid waste authority for recycling information.



ENVIRONMENT PROTECTION

Recycle unwanted materials instead of disposing of them as waste. All tools, accessories and packaging should be sorted, taken to a recycling centre and disposed of in a manner which is compatible with the environment. When the product becomes completely unserviceable and requires disposal, drain any fluids (if applicable) into approved containers and dispose of the product and fluids according to local regulations.

REGISTER YOUR PURCHASE HERE

Note: It is our policy to continually improve products and as such we reserve the right to alter data, specifications and component parts without prior notice.
Important: No Liability is accepted for incorrect use of this product.
Warranty: Lifetime guarantee. Proof of which is required for any claim.

Jack Sealey (EU) Ltd t/a Sealey Group Farney Street, Carrickmacross, Co. Monaghan, A81 PK68 Ireland
Jack Sealey Ltd t/a Sealey Group Kempson Way, Suffolk Business Park, Bury St Edmunds, Suffolk, IP32 7AR UK
Tel: 01284 757500 ▪ **Email:** sales@sealey.co.uk ▪ **Web:** www.sealey.co.uk

© Jack Sealey Limited